Projects in Wireless Communication
Carrier Transmission

Fredrik Tufvesson

Department of Electrical and Information Technology

Lund University, Sweden

Lund, Spring 2026

Carrier Transmission

The transmitted signal is $y(t) = \sum_k a_k h(t - kT)$.

What is the bandwidth?
More generally, what is its Fourier transform?

Carrier Transmission

1.	Linearity	$ax_1(t) + bx_2(t) \leftrightarrow aX_1(f) + bX_2(f)$
2.	Inverse	$x(t) = \int_{-\infty}^{\infty} X(f)\, e^{j\omega t} df$
3.	Translation (time shift)	$x(t - t_0) \leftrightarrow X(f)\, e^{-j\omega t_0}$
4.	Modulation (frequency shift)	$x(t)\, e^{j\omega_0 t} \leftrightarrow X(f - f_0)$
		$x(t) \cos \omega_0 t \leftrightarrow \frac{1}{2} X(f + f_0) + \frac{1}{2} X(f - f_0)$
5.	Time scaling	$x(at) \leftrightarrow \frac{1}{\lvert a \rvert} X(f/a)$
6.	Differentiation in time	$\frac{d}{dt} x(t) \leftrightarrow j\omega X(f)$
7.	Integration in time	$\int_{-\infty}^{t} x(\tau) d\tau \leftrightarrow \frac{1}{j\omega} X(f)$
8.	Duality	$X(t) \leftrightarrow x(-f)$
9.	Conjugate functions	$x^*(t) \leftrightarrow X^*(-f)$
10.	Convolution in time	$x_1(t) * x_2(t) \leftrightarrow X_1(f) X_2(f)$
11.	Multiplication in time	$x_1(t) x_2(t) \leftrightarrow X_1(f) * X_2(f)$
12.	Parseval's formulas	$\int_{-\infty}^{\infty} x_1(t) x_2^*(t) dt = \int_{-\infty}^{\infty} X_1(f) X_2^*(f) df$
		or, when $x_1(t) = x_2(t)$,
		$\int_{-\infty}^{\infty} \lvert x(t) \rvert^2 dt = \int_{-\infty}^{\infty} \lvert X(f) \rvert^2 df$

Table 1: Properties of the Fourier transform.

Carrier Transmission

The baseband signal is $y(t) = \sum_k a_k h(t - kT)$. The power spectral density of the transmission is $\propto |H(f)|^2$

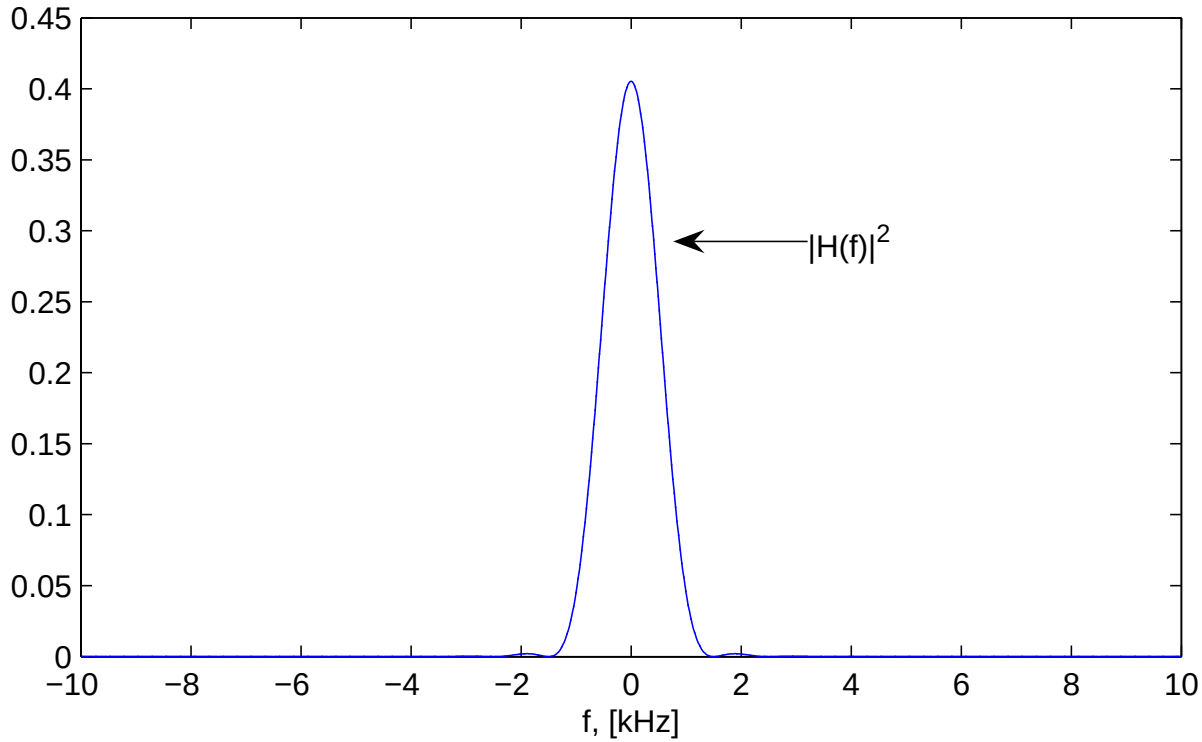

Carrier Transmission

The baseband signal is $y(t) = \sum_k a_k h(t - kT)$. The power spectral density of the transmission is $\propto |H(f)|^2$

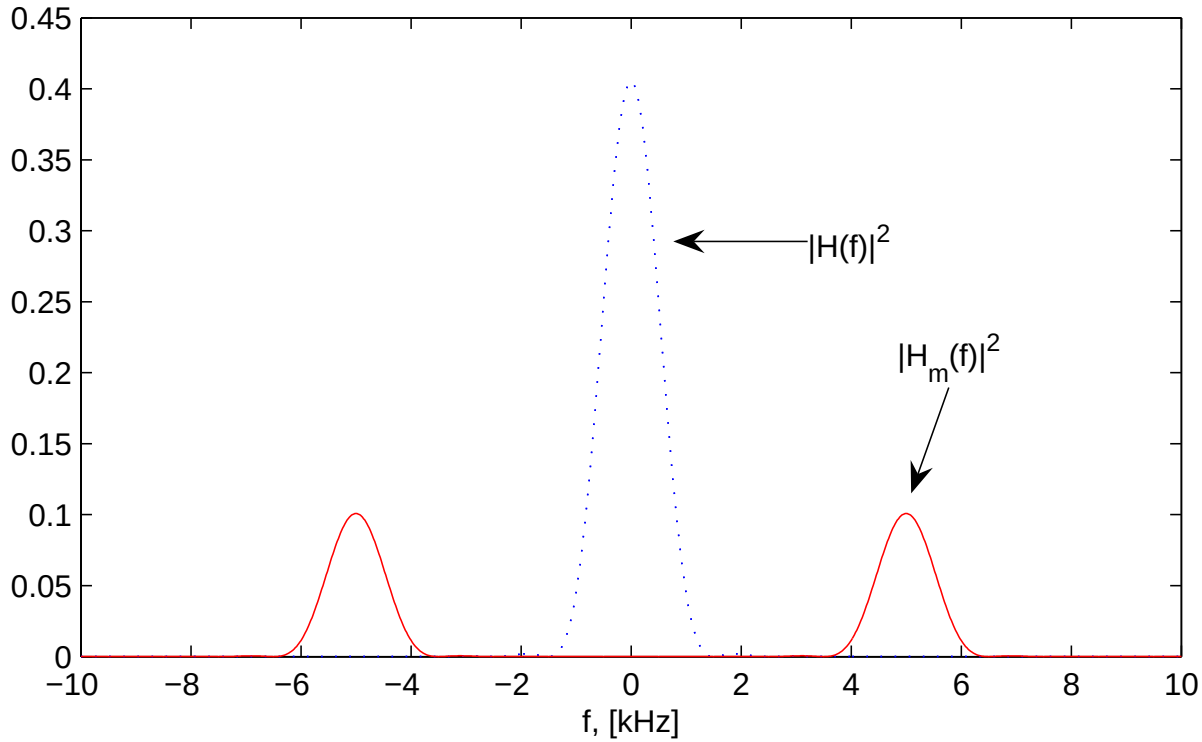

The carrier modulated signal is $y_m(t) = y(t)\cos(2\pi t f_c)$

Carrier Transmission

The baseband signal is $y(t) = \sum_k a_k h(t - kT)$. The power spectral density of the transmission is $\propto |H(f)|^2$

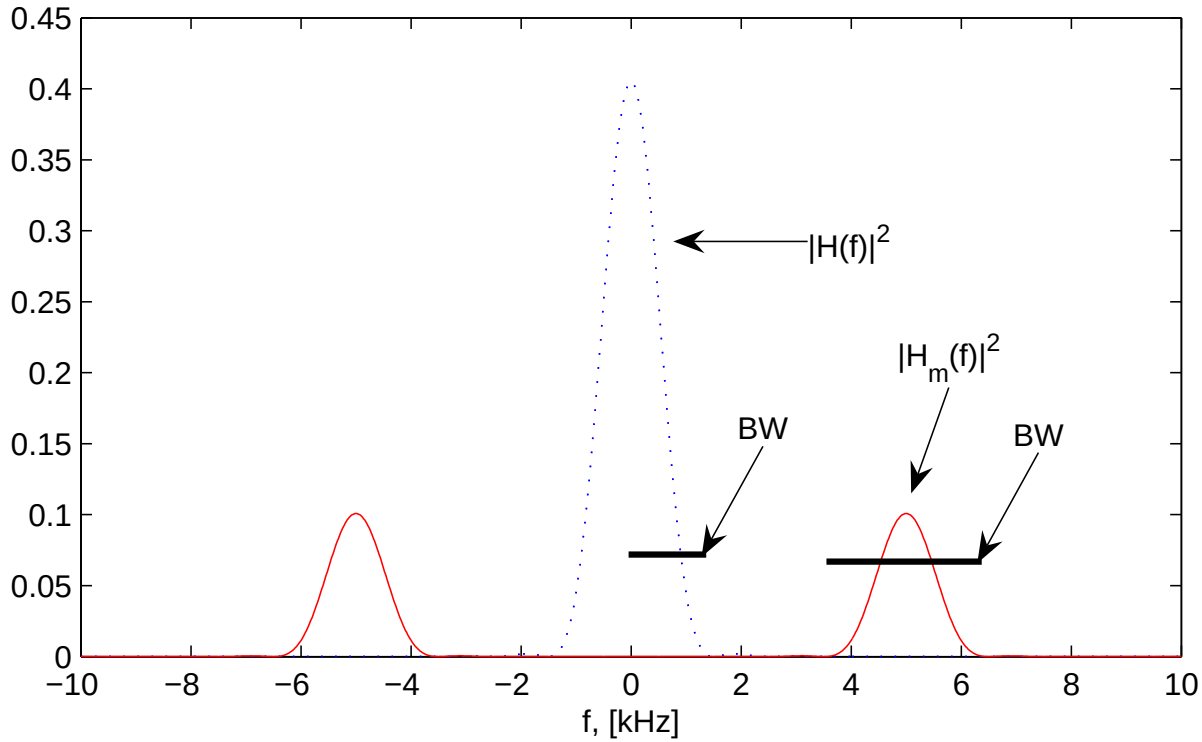

The carrier modulated signal is $y_m(t) = y(t)\cos(2\pi t f_c)$

But bandwidth gets twice as large!

Carrier Transmission

Where did the energy go?

Basic Fourier relations:

$$\cos(2\pi f_c t)h(t) \longleftrightarrow \frac{1}{2}H(f - f_c) + \frac{1}{2}H(f + f_c)$$

$$\sin(2\pi f_c t)h(t) \longleftrightarrow \frac{i}{2}H(f - f_c) - \frac{i}{2}H(f + f_c)$$

Carrier Transmission

Where did the energy go?

Basic Fourier relations:

$$\cos(2\pi f_c t)h(t) \longleftrightarrow \frac{1}{2}H(f - f_c) + \frac{1}{2}H(f + f_c)$$

$$\sin(2\pi f_c t)h(t) \longleftrightarrow \frac{i}{2}H(f - f_c) - \frac{i}{2}H(f + f_c)$$

The $1/2$ factor corresponds to a $1/4$ of the energy. Since there are two terms, $1/2$ of the energy is preserved.

Carrier Transmission

Where did the energy go?

Basic Fourier relations:

$$\cos(2\pi f_c t)h(t) \longleftrightarrow \frac{1}{2}H(f - f_c) + \frac{1}{2}H(f + f_c)$$

$$\sin(2\pi f_c t)h(t) \longleftrightarrow \frac{i}{2}H(f - f_c) - \frac{i}{2}H(f + f_c)$$

The $1/2$ factor corresponds to a $1/4$ of the energy. Since there are two terms, $1/2$ of the energy is preserved.

What about the increased bandwidth?

Carrier Transmission

Assume two independent baseband transmissions

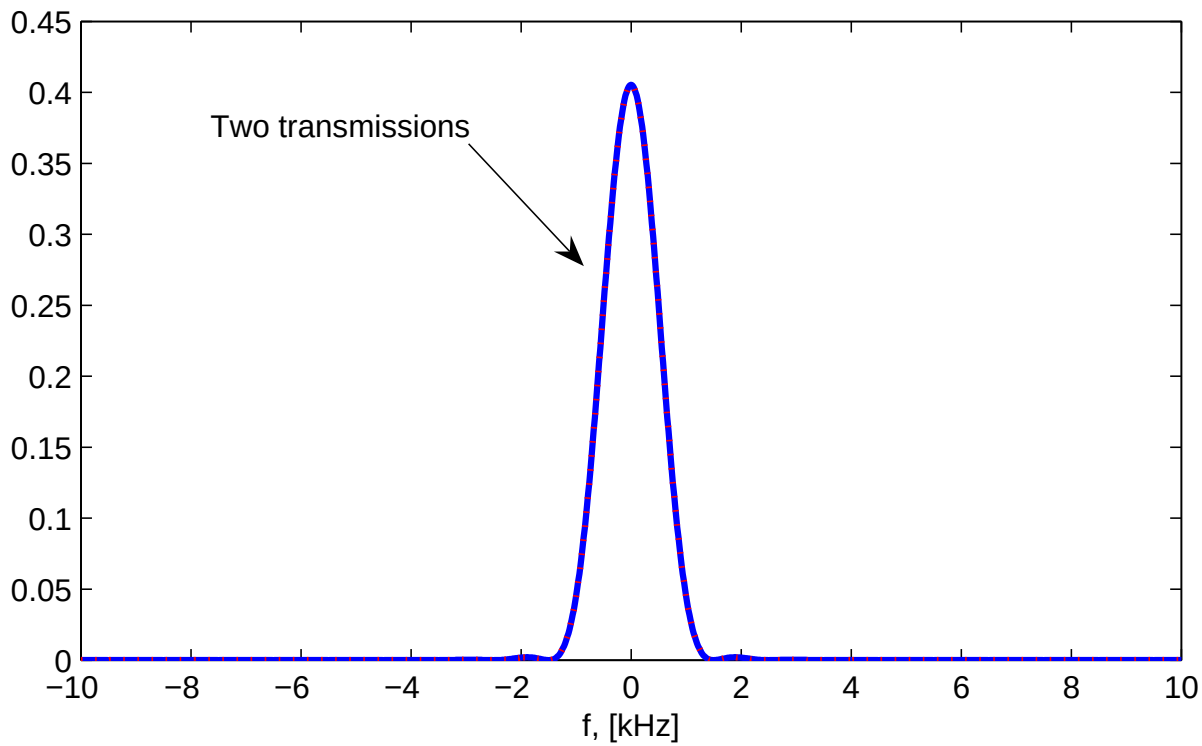

Carrier Transmission

Assume two independent baseband transmissions
After modulation with $\cos(2\pi t f_c)$ and $\sin(2\pi t f_c)$ we get

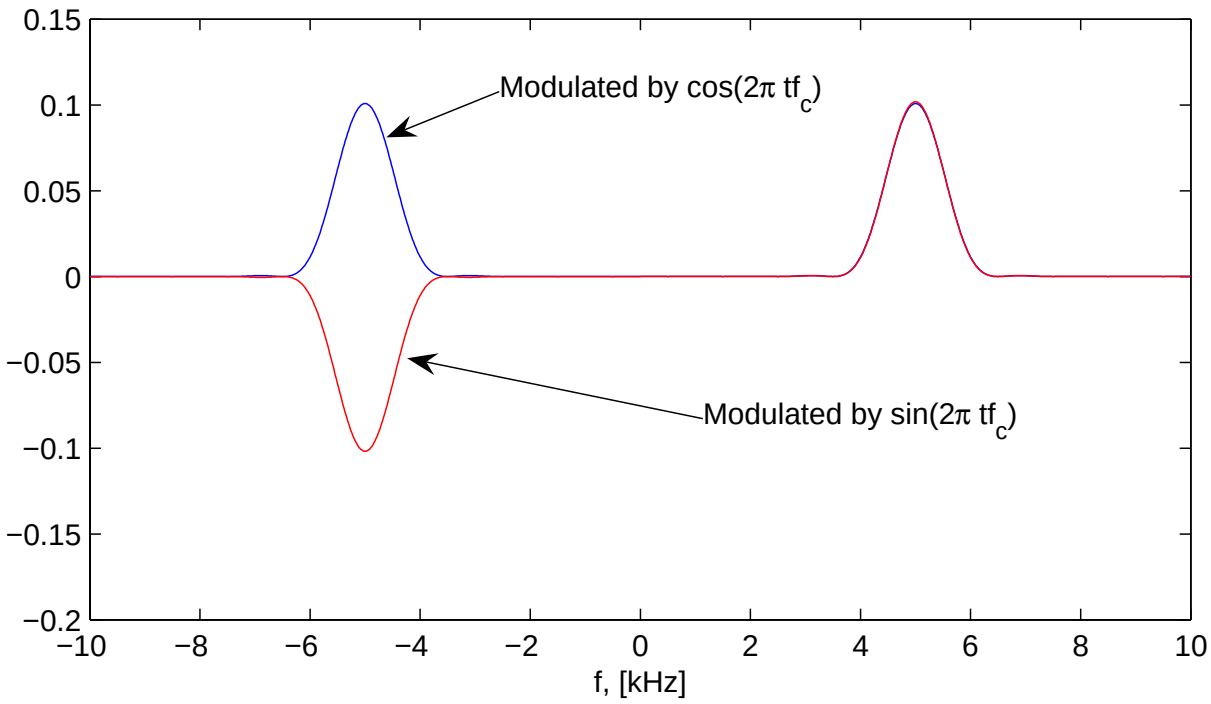

LUND UNIVERSITY

Carrier Transmission

Assume two independent baseband transmissions
After demodulation with $\cos(2\pi t f_c)$ we get

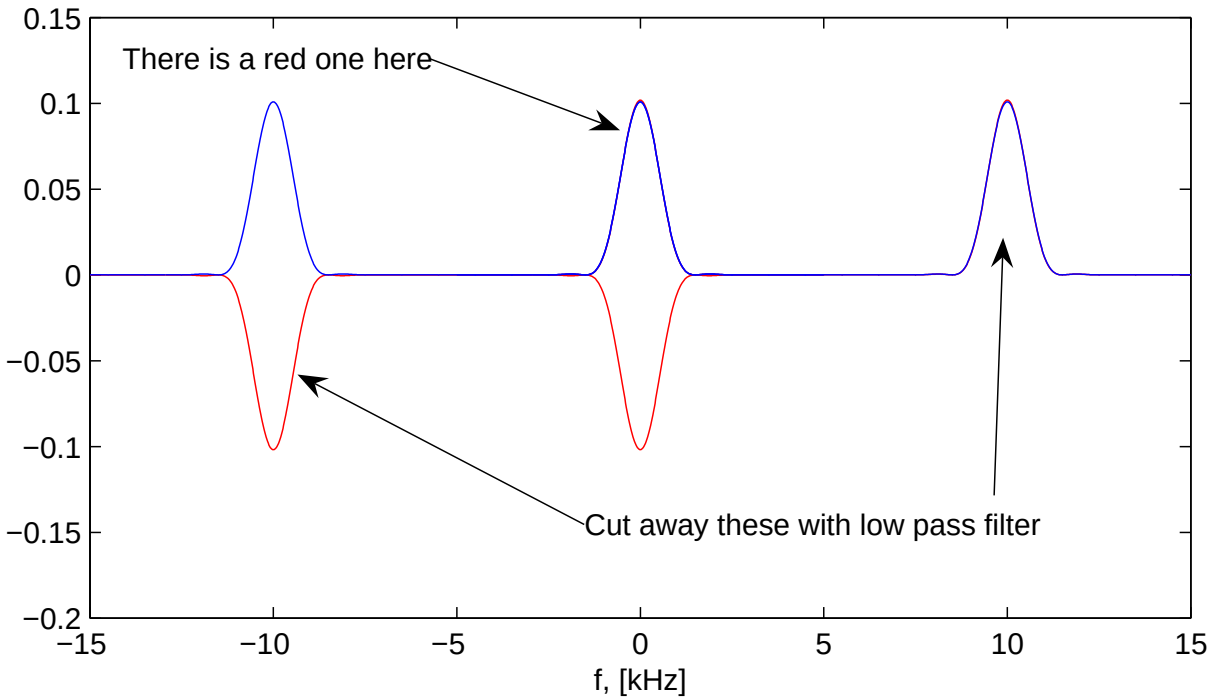

The red spectras around f=0 cancel out, thus, we can detect the blue independently from the red. Equivalent for demodulation with $\sin(2\pi t f_c)$

Carrier Transmission

The block diagram of the transmitter is

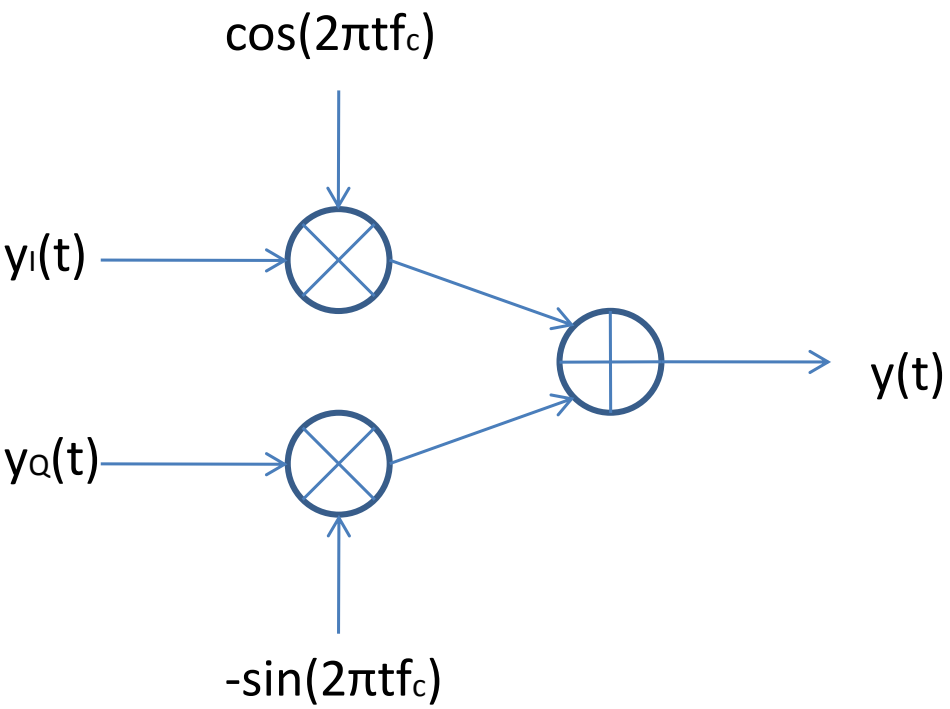

$$y(t) = y_I(t)\cos(2\pi f_c t) - y_Q(t)\sin(2\pi f_c t)$$

Carrier Transmission

The block diagram of the receiver is

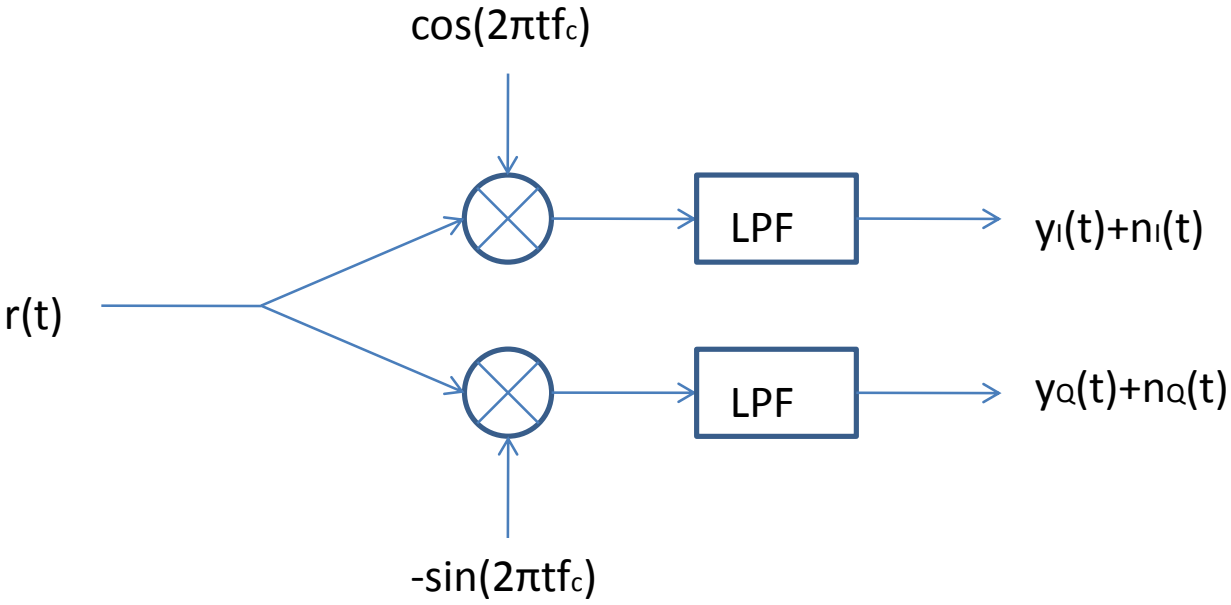

The in-phase and the quadrature components can be independently detected!
The LPF (low pass filters) can be taken as a matched filter to $h(t)$

Carrier Transmission

The signals at both rails are baseband signals, and conventional processing follows: matched filter $\rightarrow$ sampling every T_s second $\rightarrow$ decision unit

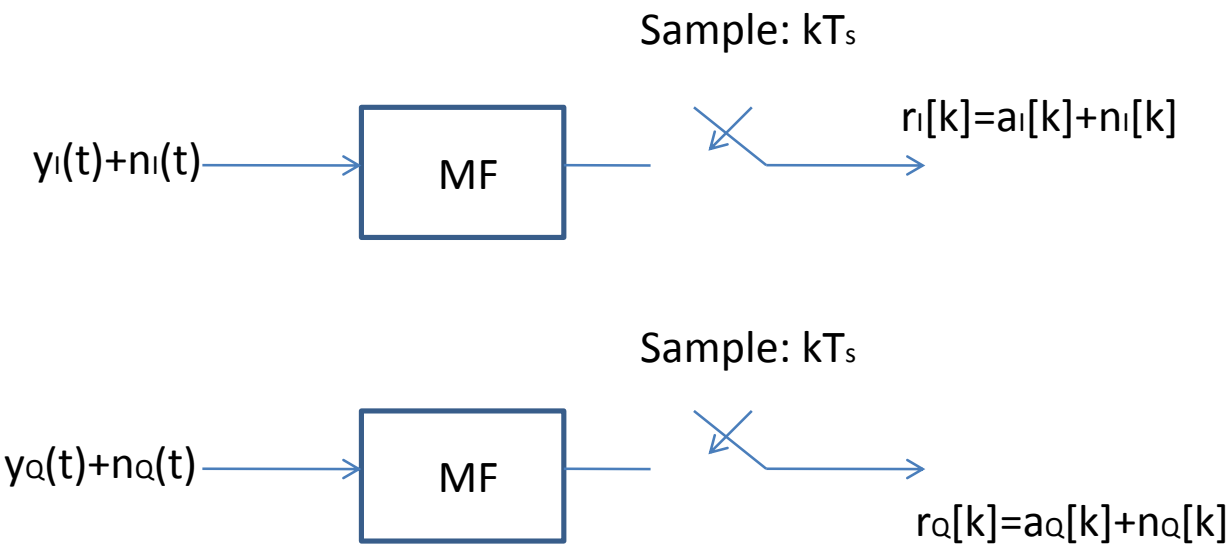

Carrier Transmission

What is a complex-valued symbol $1 + i$?

In QPSK, we transmit complex valued symbols. In one symbol interval, we have

$$y(t) = \underbrace{h(t)}_{y_I(t)} \cos(2\pi f_c t) - \underbrace{h(t)}_{y_Q(t)} \sin(2\pi f_c t)$$

Carrier Transmission

We can alternatively express the signal $y(t)$ as

$$\begin{aligned} y(t) &= y_I(t)\cos(2\pi f_c t) - y_Q(t)\sin(2\pi f_c t) \\ &= e(t)\cos(2\pi f_c t + \theta(t)) \end{aligned}$$

where $e(t)$ is the envelope and $\theta(t)$ is the phase

For QPSK, $e(t) = \sqrt{2}h(t)$ and $\theta(t) \in \{\pi/4, 3\pi/4, 5\pi/4, 7\pi/4\}$

We can further manipulate $y(t)$ into

$$\begin{aligned} y(t) &= \mathrm{Re}\{(y_I(t) + iy_Q(t))\mathrm{e}^{i2\pi f_c t}\} \\ &= \mathrm{Re}\{\tilde{y}(t)\mathrm{e}^{i2\pi f_c t}\} \end{aligned}$$

where

$$\tilde{y}(t) = y_I(t) + iy_Q(t)$$

Carrier Transmission

Example

Assume that we have two bits to transmit, say +1 and -1.

Carrier Transmission

Example

Assume that we have two bits to transmit, say +1 and -1.

We can either do this as

$$y(t) = h(t)\cos(2\pi f_c t) - (-h(t))\sin(2\pi f_c t)$$

Carrier Transmission

Example

Assume that we have two bits to transmit, say +1 and -1.

We can either do this as

$$y(t) = h(t)\cos(2\pi f_c t) - (-h(t))\sin(2\pi f_c t)$$

or as

$$y(t) = \sqrt{2}h(t)\cos(2\pi f_c t + 7\pi/4)$$

Carrier Transmission

Example

Assume that we have two bits to transmit, say +1 and -1.

We can either do this as

$$y(t) = h(t)\cos(2\pi f_c t) - (-h(t))\sin(2\pi f_c t)$$

or as

$$y(t) = \sqrt{2}h(t)\cos(2\pi f_c t + 7\pi/4)$$

or as

$$y(t) = \mathrm{Re}\{(1-i)h(t)\mathrm{e}^{i2\pi f_c t}\}$$

Carrier Transmission

In the last representation, we can change the receiver processing into

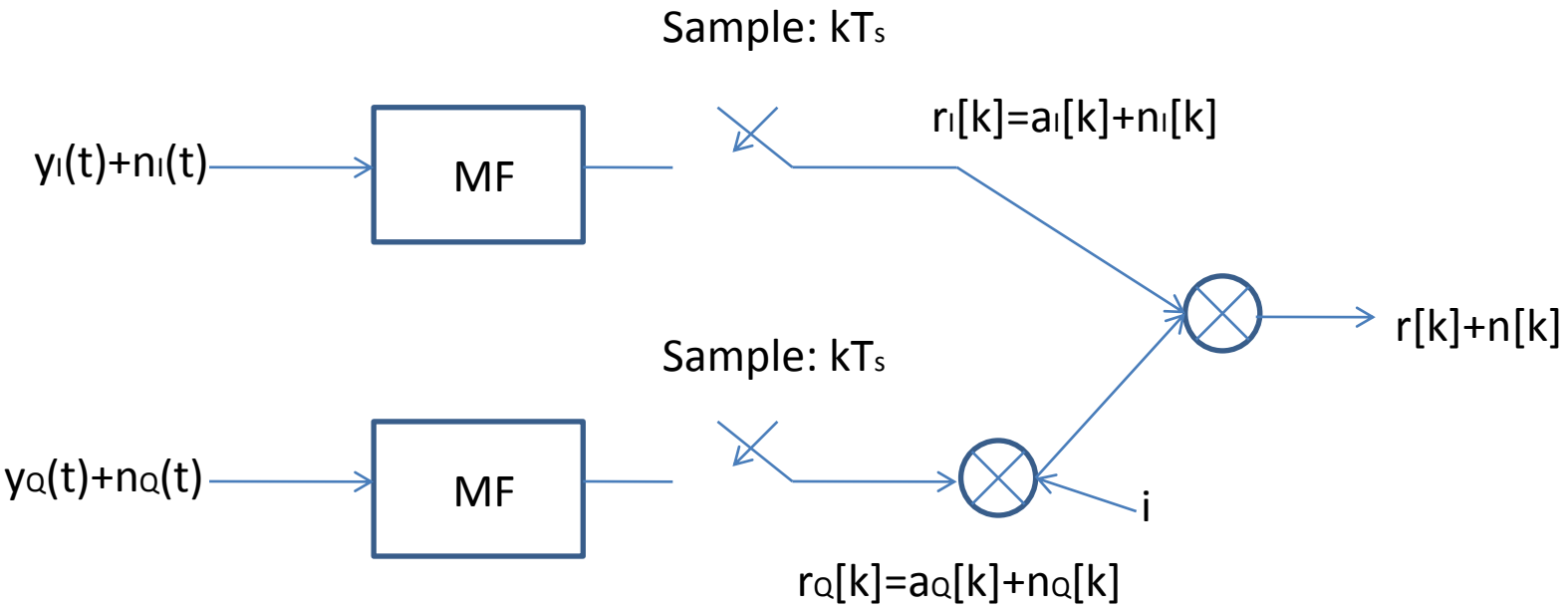

LUND UNIVERSITY

Project in Wireless Communication
Lecture 2, IQ modulation

FREDRIK TUFVESSON, FREDRIK RUSEK
ELECTRICAL AND INFORMATION TECHNOLOGY

System model

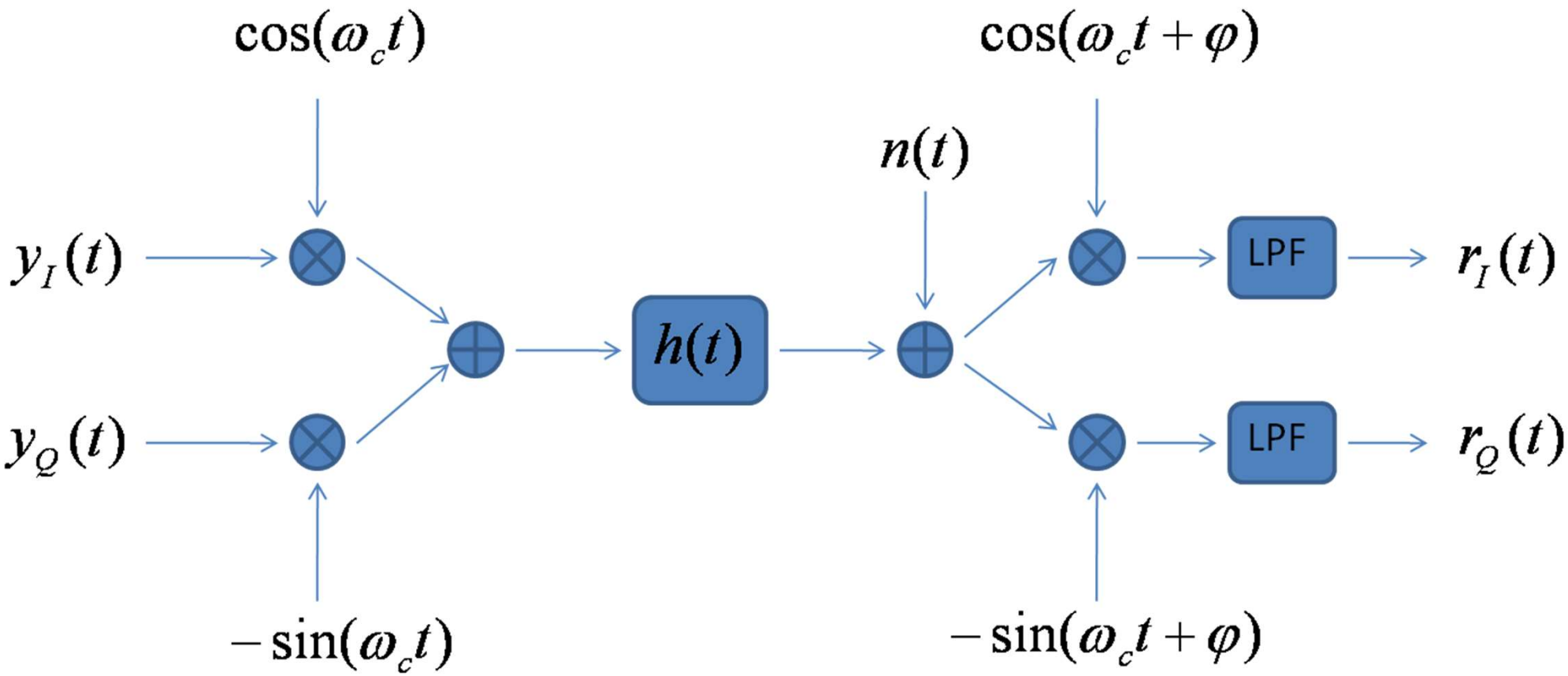

We want to represent the outputs as functions of the inputs
Note that the receiver and transmitter are not synchronous

Models of input and channel

The transmitted signal $y(t)$ equals

$$y(t) = y_I(t)\cos(\omega_c t) - y_Q(t)\sin(\omega_c t).$$

Similarily, the channel impulse response can be expressed as

$$h(t) = h_I(t)\cos(\omega_c t) - h_Q(t)\sin(\omega_c t).$$

LUND UNIVERSITY

Channel output in the Fourier domain

To evaluate $r(t) = y(t) * h(t)$, we consider the signals in the Fourier domain:

$$
\begin{aligned}
R(f) &= Y(f)H(f) \\
&= \frac{1}{4}\left[Y_I(f+f_c) + Y_I(f-f_c) + \jmath Y_Q(f+f_c) - \jmath Y_Q(f-f_c)\right] \\
&\quad \times \left[H_I(f+f_c) + H_I(f-f_c) + \jmath H_Q(f+f_c) - \jmath H_Q(f-f_c)\right]
\end{aligned}
$$

Now observe that a product of the type $Y_{I/Q}(f \pm f_c)H_{I/Q}(f \mp f_c) = 0$

Channel output in the Fourier domain

$$
\begin{aligned}
R(f) \;=\; & \frac{1}{4}\,[Y_I(f+f_c)H_I(f+f_c) + \jmath Y_I(f+f_c)H_Q(f+f_c) + Y_I(f-f_c)H_I(f-f_c) \\
& -\jmath Y_I(f-f_c)H_Q(f-f_c) + \jmath Y_Q(f+f_c)H_I(f+f_c) - Y_Q(f+f_c)H_Q(f+f_c) \\
& -\jmath Y_Q(f-f_c)H_I(f+f_c) - Y_Q(f-f_c)H_Q(f-f_c)]
\end{aligned}
$$

LUND UNIVERSITY

Channel output in the Fourier domain

$$
\begin{aligned}
R(f) \;=\; & \frac{1}{4}\,[\underbrace{Y_I(f+f_c)H_I(f+f_c)} + \jmath Y_I(f+f_c)H_Q(f+f_c) + \underbrace{Y_I(f-f_c)H_I(f-f_c)} \\
& -\jmath Y_I(f-f_c)H_Q(f-f_c) + \jmath Y_Q(f+f_c)H_I(f+f_c) - Y_Q(f+f_c)H_Q(f+f_c) \\
& -\jmath Y_Q(f-f_c)H_I(f+f_c) - Y_Q(f-f_c)H_Q(f-f_c)]
\end{aligned}
$$

By identifying terms, we get that

$$r(t) = \tilde{r}_I(t)\cos(\omega_c t) - \tilde{r}_Q(t)\sin(\omega_c t),$$

with

$$\tilde{r}_I(t) = \frac{1}{2}[y_I(t) * h_I(t) - y_Q(t) * h_Q(t)]$$

and

$$\tilde{r}_Q(t) = \frac{1}{2}[y_I(t) * h_Q(t) + y_Q(t) * h_I(t)].$$

Channel output in the Fourier domain

$$
\begin{aligned}
R(f) \;=\; \frac{1}{4}\,[&\underbrace{Y_I(f+f_c)H_I(f+f_c)} + \jmath Y_I(f+f_c)H_Q(f+f_c) + \underbrace{Y_I(f-f_c)H_I(f-f_c)} \\
&-\jmath Y_I(f-f_c)H_Q(f-f_c) + \jmath Y_Q(f+f_c)H_I(f+f_c) - \underbrace{Y_Q(f+f_c)H_Q(f+f_c)} \\
&-\jmath Y_Q(f-f_c)H_I(f+f_c) - \underbrace{Y_Q(f-f_c)H_Q(f-f_c)}]
\end{aligned}
$$

By identifying terms, we get that

$$r(t) = \tilde{r}_I(t)\cos(\omega_c t) - \tilde{r}_Q(t)\sin(\omega_c t),$$

with

$$\tilde{r}_I(t) = \frac{1}{2}[y_I(t) * h_I(t) - y_Q(t) * h_Q(t)]$$

and

$$\tilde{r}_Q(t) = \frac{1}{2}[y_I(t) * h_Q(t) + y_Q(t) * h_I(t)].$$

LUND UNIVERSITY

Channel output in the Fourier domain

$$
\begin{aligned}
R(f) \;=\; \frac{1}{4}\,[\,&Y_I(f+f_c)H_I(f+f_c) + \jmath Y_I(f+f_c)H_Q(f+f_c) + Y_I(f-f_c)H_I(f-f_c) \\
&-\jmath Y_I(f-f_c)H_Q(f-f_c) + \jmath Y_Q(f+f_c)H_I(f+f_c) - Y_Q(f+f_c)H_Q(f+f_c) \\
&-\jmath Y_Q(f-f_c)H_I(f+f_c) - Y_Q(f-f_c)H_Q(f-f_c)]
\end{aligned}
$$

By identifying terms, we get that

$$r(t) = \tilde{r}_I(t)\cos(\omega_c t) - \tilde{r}_Q(t)\sin(\omega_c t),$$

with

$$\tilde{r}_I(t) = \frac{1}{2}[y_I(t) * h_I(t) - y_Q(t) * h_Q(t)]$$

and

$$\tilde{r}_Q(t) = \frac{1}{2}[y_I(t) * h_Q(t) + y_Q(t) * h_I(t)].$$

Channel output in the Fourier domain

$$
\begin{aligned}
R(f) \;=\; \frac{1}{4}[&\underbrace{Y_I(f+f_c)H_I(f+f_c)} + \underbrace{\jmath Y_I(f+f_c)H_Q(f+f_c)} + \underbrace{Y_I(f-f_c)H_I(f-f_c)} \\
&-\underbrace{\jmath Y_I(f-f_c)H_Q(f-f_c)} + \underbrace{\jmath Y_Q(f+f_c)H_I(f+f_c)} - \underbrace{Y_Q(f+f_c)H_Q(f+f_c)} \\
&-\underbrace{\jmath Y_Q(f-f_c)H_I(f+f_c)} - \underbrace{Y_Q(f-f_c)H_Q(f-f_c)}]
\end{aligned}
$$

By identifying terms, we get that

$$r(t) = \tilde{r}_I(t)\cos(\omega_c t) - \tilde{r}_Q(t)\sin(\omega_c t),$$

with

$$\tilde{r}_I(t) = \frac{1}{2}[y_I(t) * h_I(t) - y_Q(t) * h_Q(t)]$$

and

$$\tilde{r}_Q(t) = \frac{1}{2}[y_I(t) * h_Q(t) + y_Q(t) * h_I(t)].$$

Channel output in the time domain

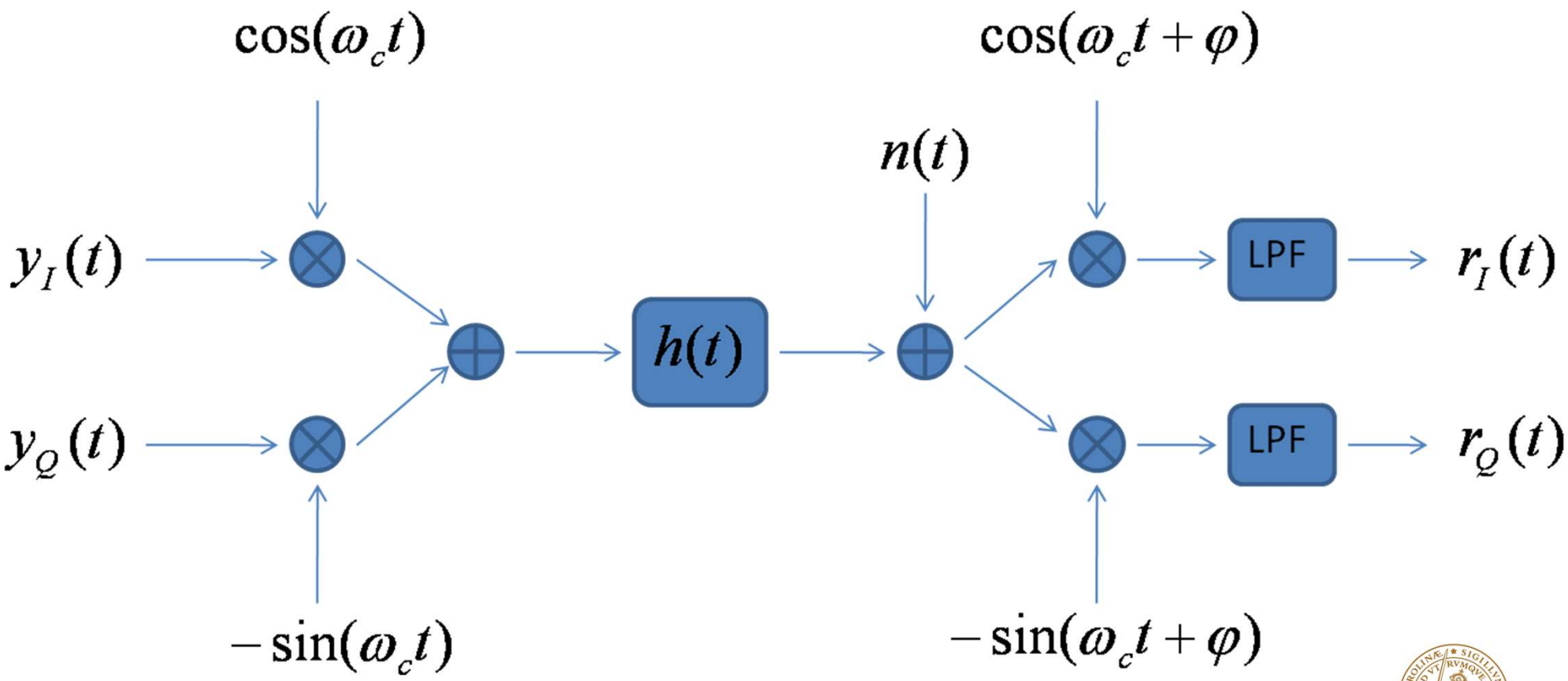

Now, lets multiply by $\cos(\omega_c t + \varphi)$

Channel output in the time domain

Basic trigonometric properties

$$\begin{aligned}
\cos(x)\cos(y) &= \tfrac{1}{2}[\cos(x+y)+\cos(x-y)] \\
\sin(x)\cos(y) &= \tfrac{1}{2}[\sin(x+y)+\sin(x-y)] \\
\sin(x)\sin(y) &= \tfrac{1}{2}[\cos(x+y)-\cos(x-y)]
\end{aligned}$$

Signal at upper rail equals

$$[\tilde{r}_I(t)\cos(\omega_c t)-\tilde{r}_Q(t)\sin(\omega_c t)]\cos(\omega_c t+\phi) =$$
$$\frac{1}{2}\Big[\,\tilde{r}_I(t)[\cancel{\cos(2\omega_c t}+\phi)+\cos(\phi)]-\tilde{r}_Q(t)[\cancel{\sin(2\omega_c t}+\phi)-\sin(\phi)]\Big]$$

Remove by low pass filtering

LUND UNIVERSITY

Channel output in the time domain

We get that

$$
\begin{aligned}
r_I(t) &= \frac{1}{2}\left[\tilde{r}_I(t)\cos(\phi) + \tilde{r}_Q(t)\sin(\phi)\right] \\
&= \frac{1}{4}\left[\left(y_I(t) * h_I(t) - y_Q(t) * h_Q(t)\right)\cos(\phi) + \left(y_I(t) * h_Q(t) + y_Q(t) * h_I(t)\right)\sin(\phi)\right]
\end{aligned}
$$

and

$$
r_Q(t) = \frac{1}{4}\left[-\left(y_I(t) * h_I(t) - y_Q(t) * h_Q(t)\right)\sin(\phi) + \left(y_I(t) * h_Q(t) + y_Q(t) * h_I(t)\right)\cos(\phi)\right]
$$

LUND UNIVERSITY

Channel output in the time domain

Now construct the two complex valued signals

$$y^c(t) \triangleq y_I(t) + \jmath y_Q(t)$$

and

$$r^c(t) \triangleq r_I(t) + \jmath r_Q(t).$$

By identifying some terms we can conclude that

$$r^c(t) = y^c(t) * h^c(t),$$

with $h^c(t) \triangleq h_I(t)\cos(\phi) + h_Q(t)\sin(\phi) + \jmath(h_Q(t)\cos(\phi) - h_I(t)\sin(\phi)).$

Final result

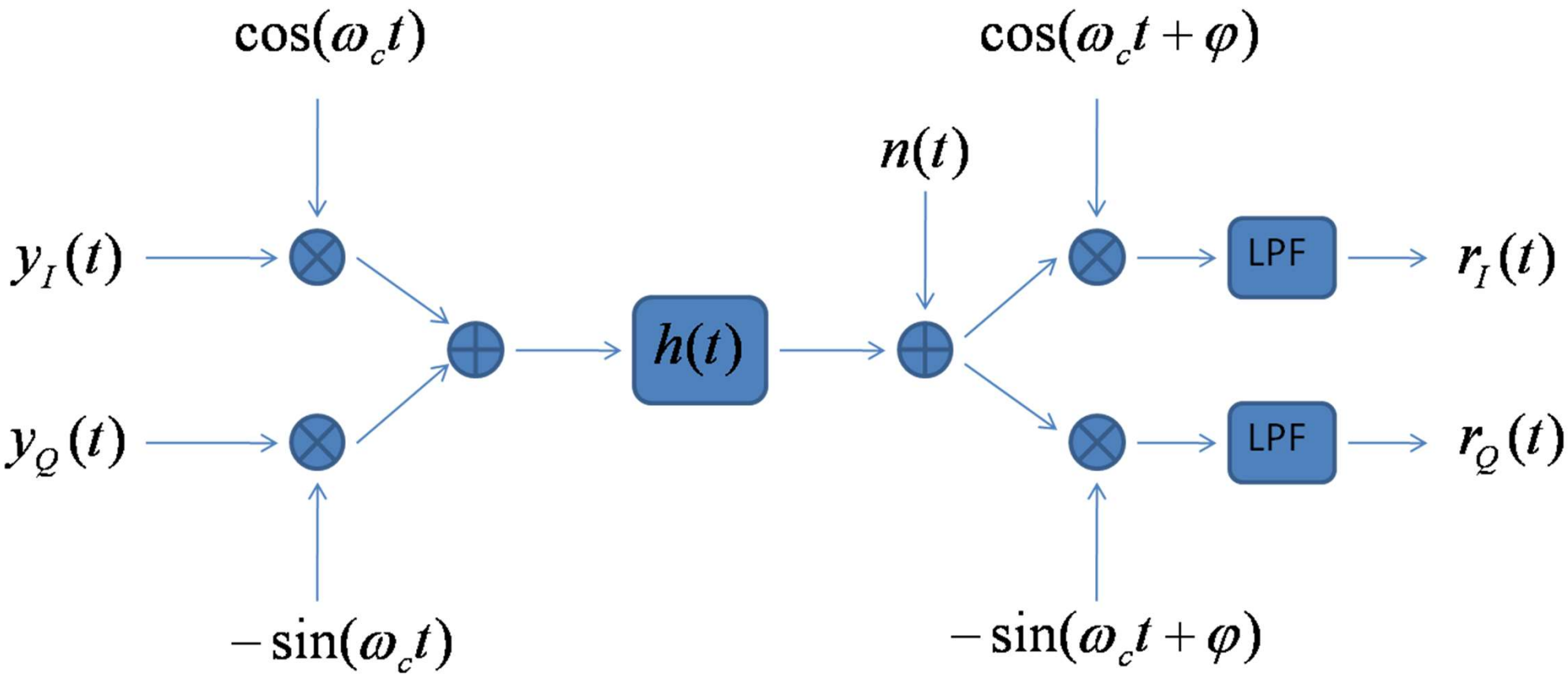

This can be modeled in the complex baseband as

Final result

$$h^c(t) \triangleq h_I(t)\cos(\phi) + h_Q(t)\sin(\phi) + \jmath(h_Q(t)\cos(\phi) - h_I(t)\sin(\phi)).$$

$$y^c(t) = y_I(t) + \jmath y_Q(t) \longrightarrow \boxed{\text{channel}} \longrightarrow r^c(t) = r_I(t) + \jmath r_Q(t)$$

$$r^c(t) = y^c(t) \star h^c(t)$$

What is the effect of ϕ ?

$$h^c(t) \triangleq h_I(t)\cos(\phi) + h_Q(t)\sin(\phi) + \jmath(h_Q(t)\cos(\phi) - h_I(t)\sin(\phi)).$$

Energy of the impulse response

$$\int_{-\infty}^{\infty} |h^c(t)|^2 dt = \int_{-\infty}^{\infty} h_I^2(t) + h_Q^2(t) dt$$

The energy is independent of ϕ!

It doesn't matter if Tx and Rx are not synchronous

Conclusion

We can always work in the complex baseband domain with the input/output relation

$$r^c(t) = y^c(t) \star h^c(t) + n^c(t)$$

And we do not care about ϕ (it must be estimated though)

LUND
UNIVERSITY